RoHS Compliant

REV.	DESCRIPTION	DESIGN	DATE
A/0	NEW	CWF	

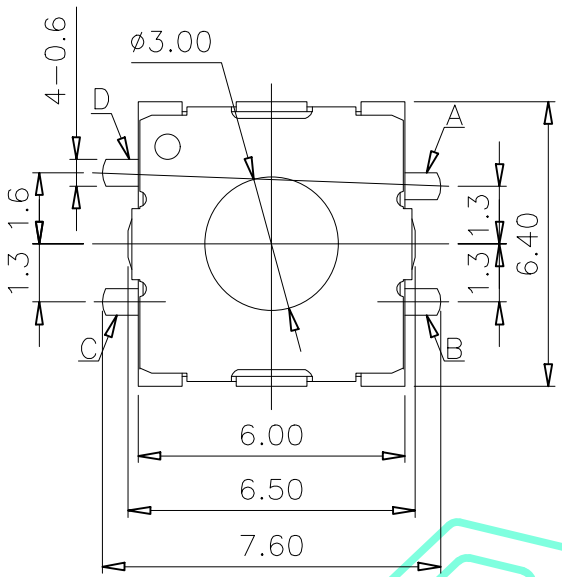

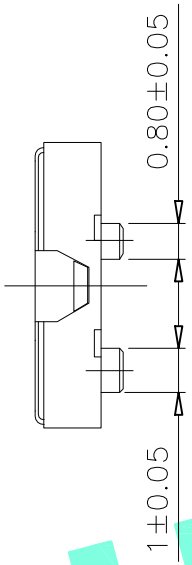

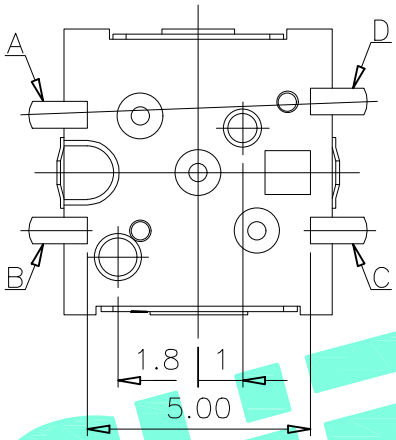

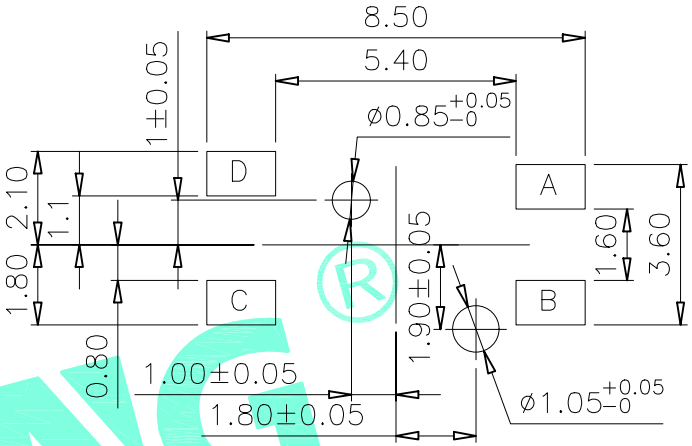

PCB Layout(Pattern side)

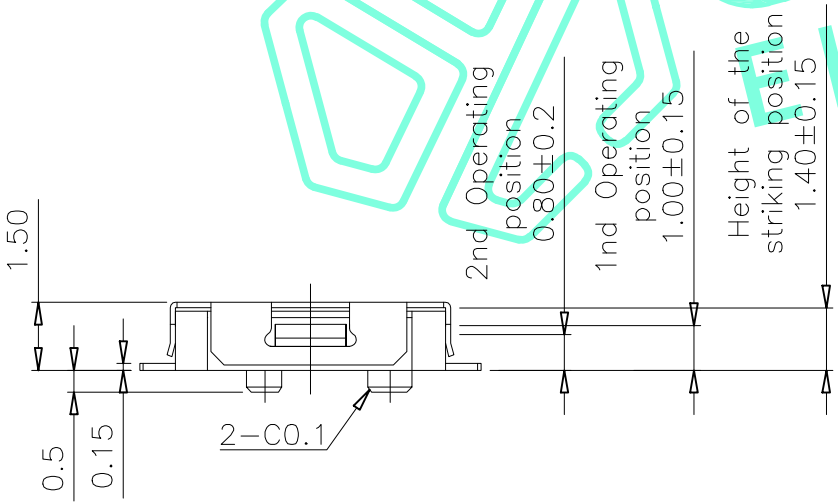

P.C.Board mounting face

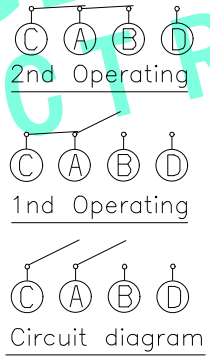

Circuit Diagram

Note:
1.Opercting force: 1st 100±50gf
2st 260±50gf

ITEM	PART NAME	QTY.	MATERIAL	FINISHING
⑤	Dust Cover	1	Kapton Film	Yellow
④	Terminal	4	Copper	Plating silver
③	Contact	1	F.Ag/SUS	Plating silver
②	Base	1	LCP	Black
①	Cover	1	SUS	Natural

THESE DRAWINGS AND SPECIFICATIONS ARE THE PROPERTY OF SHENZHEN YUCHENG ELECTRONICS.,LTD.AND SHALL NOT BE REPROOUCED.COPIED OR USED IN ANY MANNER WITHOUT THE PRIOR WRITTEN CONSENT OF SHENZHEN YUCHENG ELECTRONICS.,LTD

APPROVED:	WEI JIE
CHECKED:	HONG JIN YUN
DRAWING:	CHEN YA

UCHENG ELECTRONICS 深圳市裕诚电子有限公司
SHENZHEN YUCHENG ELECTRONICS CO.,LTD

GENERAL TOLERANCES	
30~以上	±0.30
10~30	±0.20
5~10	±0.15
~ 5	±0.10
SHEET:	1 / 1

TITLE:	TACT SWITCH
PART NO:	M2-3983D
WEBSITE :	www.ycelectron.com

REV: A | UNIT: mm | SCALE: / | SHEET: A4

UCHENG ELECTRONICS ®