RoHS Compliant

REV.	DESCRIPTION	DESIGN	DATE
A/0	NEW	CWF	

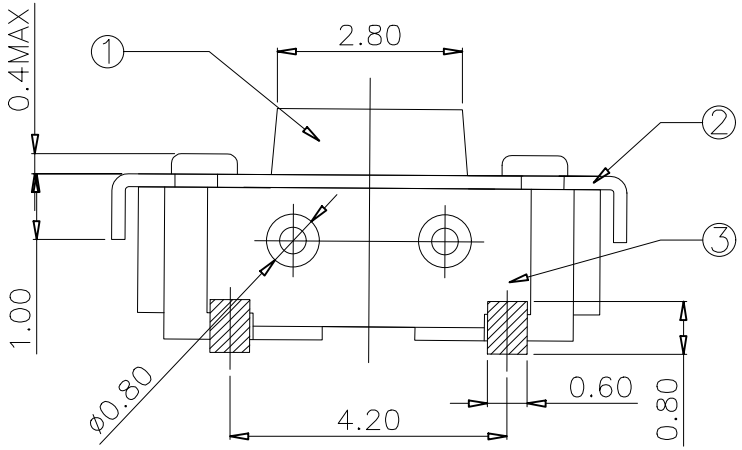

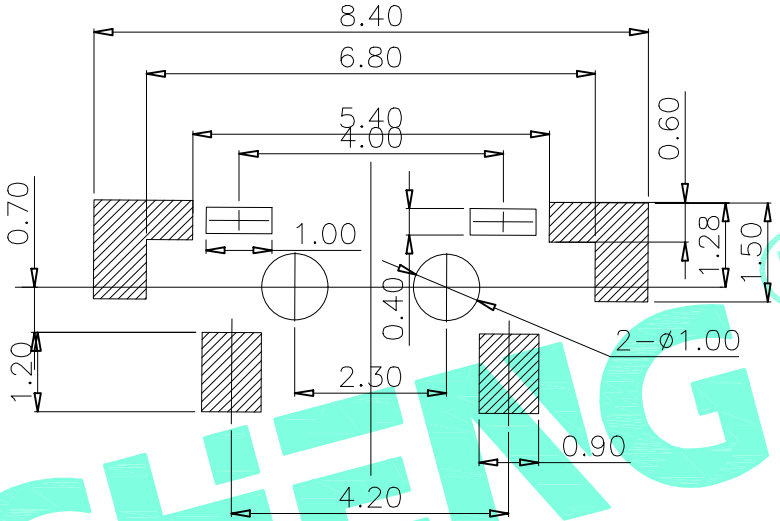

PCB Layout recommended

NO.1	
PART NO	VIGOR
3	180±35
4	250±35

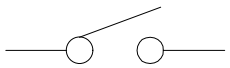

Circuit diagram

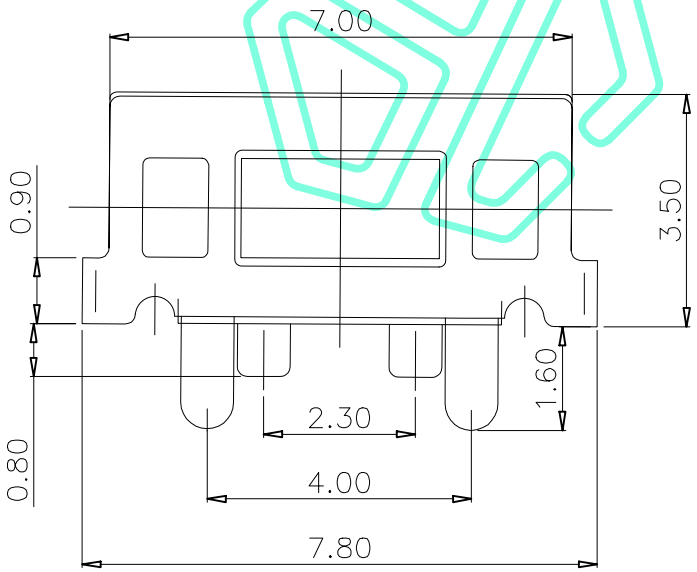

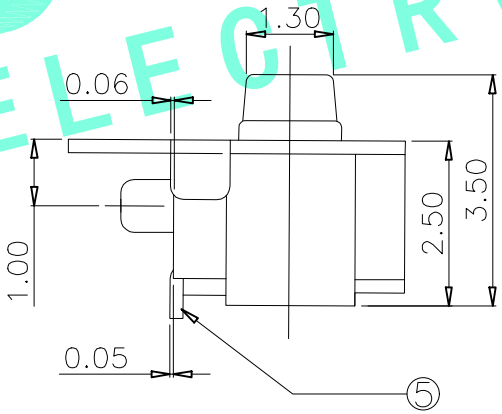

ITEM	PART NAME	QTY.	MATERIAL	FINISHING
⑤	Terminal	2	Phosphor Bronze	Plating silver
④	Contact	2	F.Ag/SUS	Natural
③	Base	1	LCP	White
②	Cover	1	Brass(0.20t)	Plating Nickel
①	Keystoke	1	LCP	Black

THESE DRAWINGS AND SPECIFICATIONS ARE THE PROPERTY OF SHENZHEN YUCHENG ELECTRONICS.,LTD.AND SHALL NOT BE REPROOUCED.COPIED OR USED IN ANY MANNER WITHOUT THE PRIOR WRITTEN CONSENT OF SHENZHEN YUCHENG ELECTRONICS.,LTD

APPROVED:	WEI JIE
CHECKED:	HONG JIN YUN
DRAWING:	CHEN YA

深圳市裕诚电子有限公司
SHENZHEN YUCHENG ELECTRONICS CO.,LTD

GENERAL TOLERANCES	
30~以上	±0.30
10~30	±0.20
5~10	±0.15
~ 5	±0.10
SHEET:	1 / 1

TITLE:	TACT SWITCH
PART NO:	M2-1722P-NO.1
WEBSITE :	www.ycelectron.com

REV: A | UNIT: mm | SCALE: / | SHEET: A4