REV.	DESCRIPTION	DESIGN	DATE
A/0	NEW	CWF	

RoHS Compliant

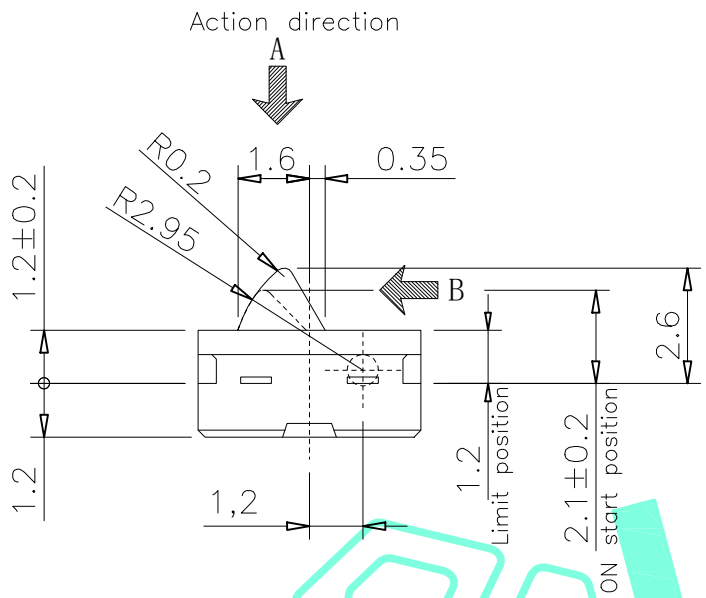

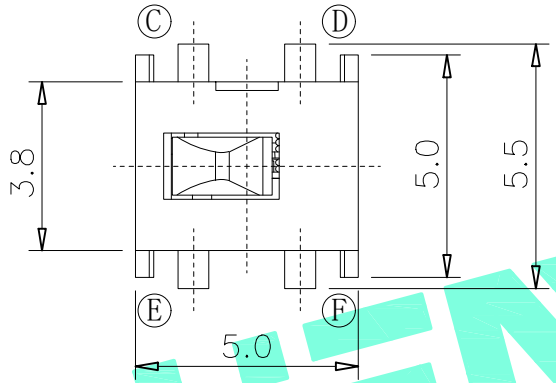

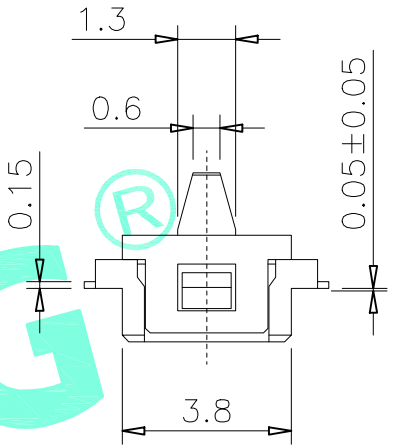

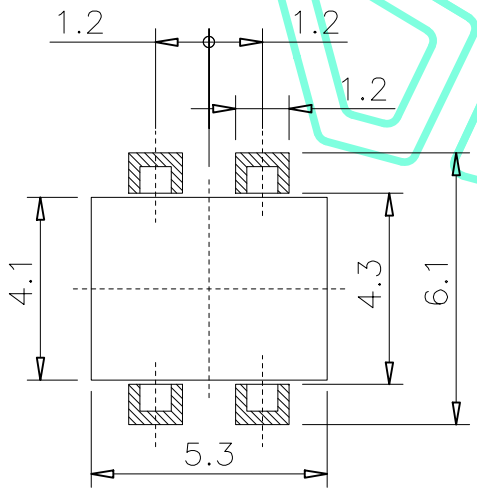

PCB LAND DIMENSION

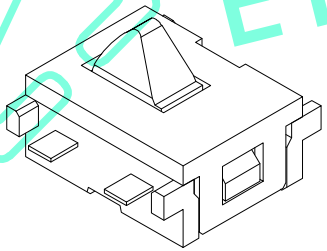

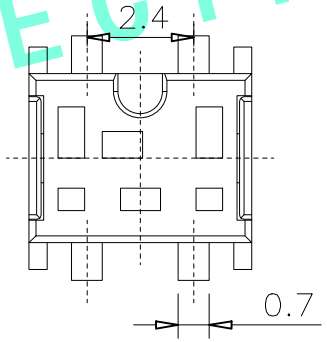

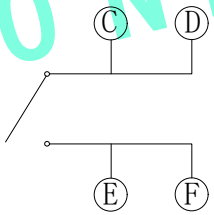

CIRCUIT DIAGRAM

NOTE:
Rating: DC 5V 5mA
Operating Force: ≤31gf
Lifetime: 100,000 Cycles

ITEM	PART NAME	QTY.	MATERIAL	FINISHING
⑤	Center Spring	1	Phosphor Bronze	Au Plated
④	Base	1	PA	Black
③	Terminal	4	Phosphor Bronze	Au Plated
②	Keystore	1	PA	Natural
①	Cover	1	PA	Black

THESE DRAWINGS AND SPECIFICATIONS ARE THE PROPERTY OF SHENZHEN YUCHENG ELECTRONICS.,LTD.AND SHALL NOT BE REPROOUCED.COPIED OR USED IN ANY MANNER WITHOUT THE PRIOR WRITTEN CONSENT OF SHENZHEN YUCHENG ELECTRONICS.,LTD

APPROVED:	WEI JIE
CHECKED:	HONG JIN YUN
DRAWING:	CHEN YA

GENERAL TOLERANCES	
30~以上	±0.30
10~30	±0.20
5~10	±0.15
~ 5	±0.10
SHEET:	1 / 1

深圳市裕诚电子有限公司
SHENZHEN YUCHENG ELECTRONICS CO.,LTD

TITLE:	DETECTION SWITCH
PART NO:	M5-1720D
WEBSITE :	www.ycelectron.com

REV: A | UNIT: mm | SCALE: / | SHEET: A4