REV.	DESCRIPTION	DESIGN	DATE
A/0	NEW	CWF	

RoHS Compliant

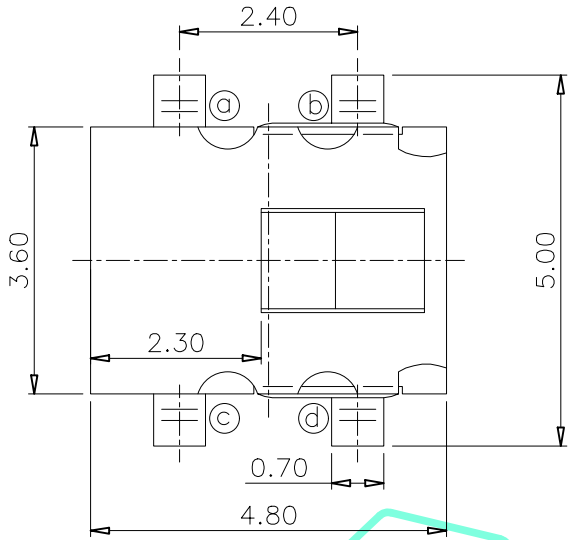

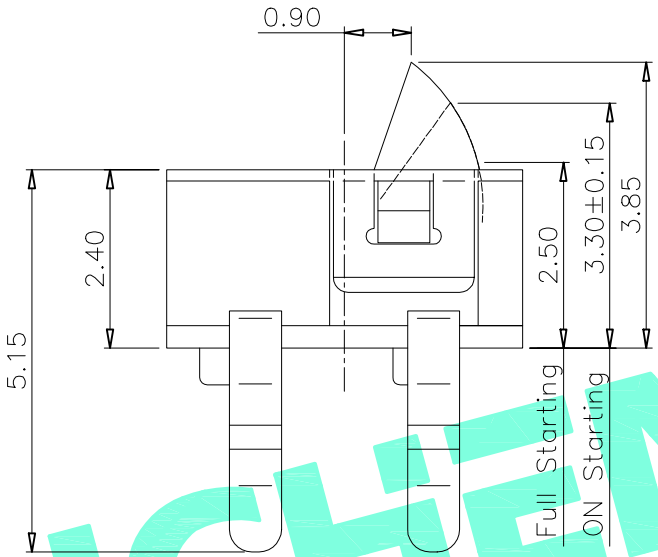

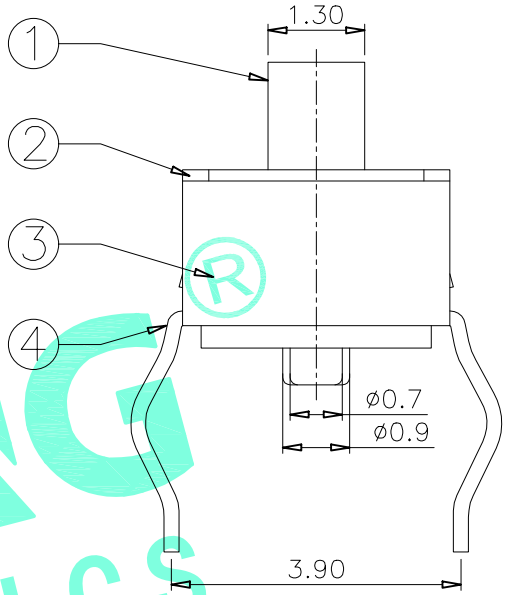

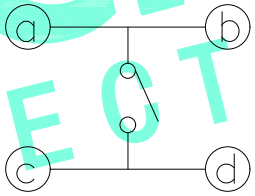

Circuit Diagram

PART NO.	
M5-1706AY	M5-1706AW

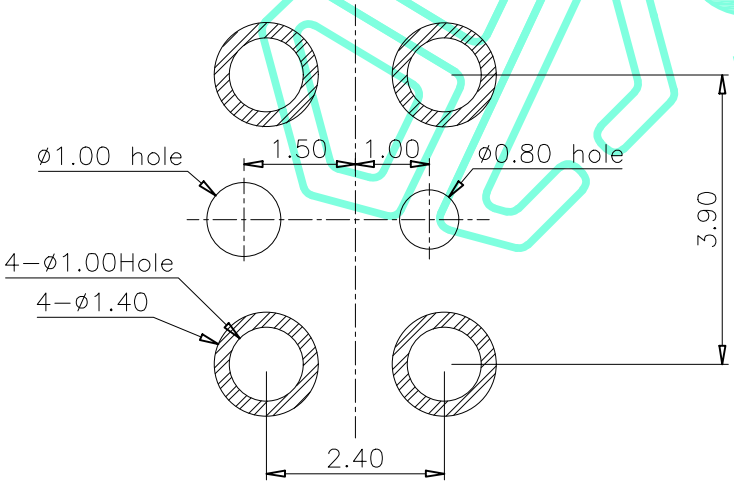

PCB Layout(Pattern side)

NOTE:
Rating: DC 30V 0.1A
Operating Force: 30±10gf
Lifetime: 100,000 Cycles

ITEM	PART NAME	QTY.	MATERIAL	FINISHING
⑤	Contact Spring	1	Be Alloy	Ag Plated
④	Terminal	4	Phosphor Bronze	Ag Plated
③	Base	1	LCP	Black
②	Cover	1	SUS	Natural
①	Slider	1	PA46	Black

THESE DRAWINGS AND SPECIFICATIONS ARE THE PROPERTY OF SHENZHEN YUCHENG ELECTRONICS.,LTD.AND SHALL NOT BE REPROOUCED.COPIED OR USED IN ANY MANNER WITHOUT THE PRIOR WRITTEN CONSENT OF SHENZHEN YUCHENG ELECTRONICS.,LTD

APPROVED:	WEI JIE
CHECKED:	HONG JIN YUN
DRAWING:	CHEN YA

UCHENG® ELECTRONICS 深圳市裕诚电子有限公司 SHENZHEN YUCHENG ELECTRONICS CO.,LTD

GENERAL TOLERANCES	
30~以上	±0.30
10~30	±0.20
5~10	±0.15
~ 5	±0.10
SHEET:	1 / 1

TITLE:	DETECTION SWITCH
PART NO:	M5-1706A
WEBSITE :	www.ycelectron.com

REV: A | UNIT: mm | SCALE: / | SHEET: A4