REV.	DESCRIPTION	DESIGN	DATE
A/0	NEW	CWF	

RoHS Compliant

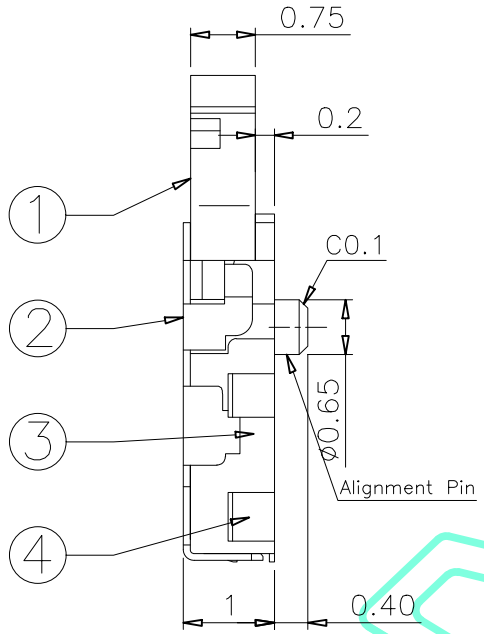

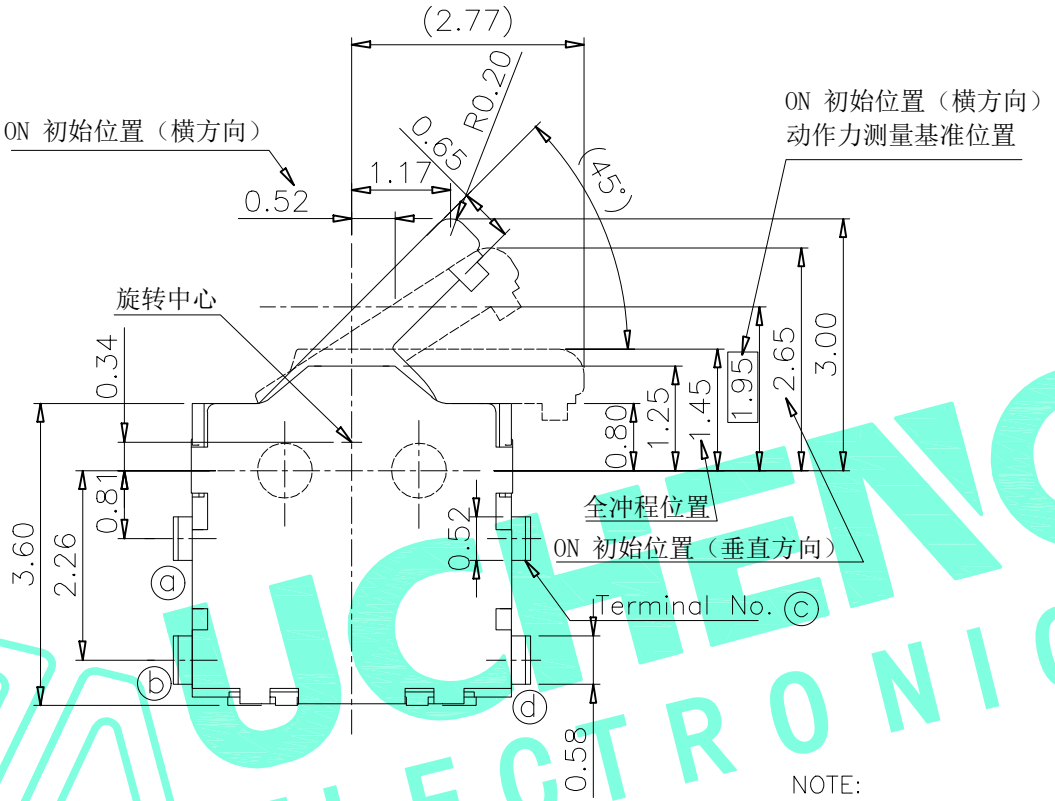

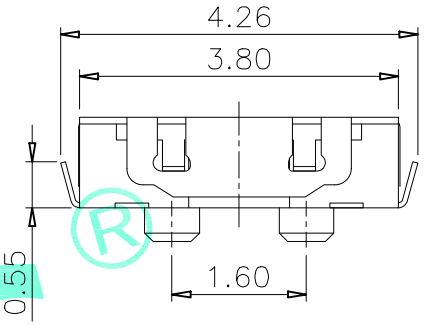

PART NO.
M5-1636D-Y
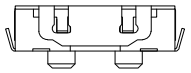
M5-1636D-W
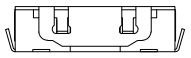

NOTE:
Rating: DC 12V 50mA
Operating Force: 20±10gf
Lifetime: 100,000 Cycles

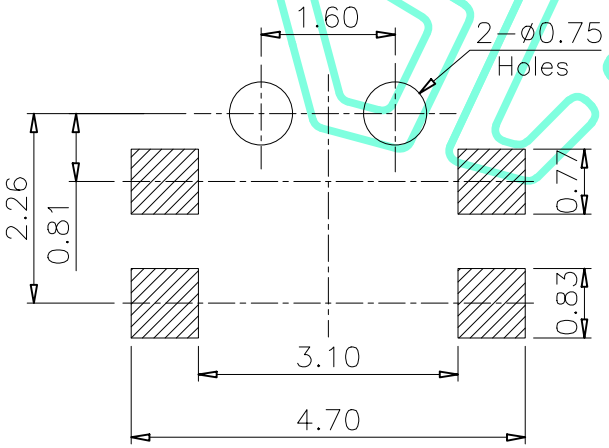

PCB Layout(Pattern side)

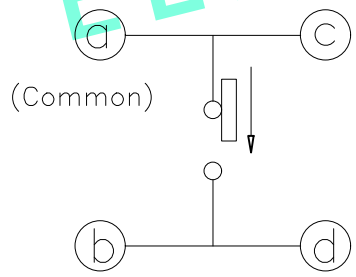

Circuit Diagram

ITEM	PART NAME	QTY.	MATERIAL	FINISHING
⑤	Contact Spring	1	Phosphor Bronze	Ag Plated
④	Terminal	4	Phosphor Bronze	Ag Plated
③	Base	1	PA46	Black
②	Cover	1	SUS	Natural
①	Slider	1	PA46	Black

THESE DRAWINGS AND SPECIFICATIONS ARE THE PROPERTY OF SHENZHEN YUCHENG ELECTRONICS.,LTD.AND SHALL NOT BE REPROOUCED.COPIED OR USED IN ANY MANNER WITHOUT THE PRIOR WRITTEN CONSENT OF SHENZHEN YUCHENG ELECTRONICS.,LTD

APPROVED:	WEI JIE
CHECKED:	HONG JIN YUN
DRAWING:	CHEN YA

GENERAL TOLERANCES	
30~以上	±0.30
10~30	±0.20
5~10	±0.15
~ 5	±0.10
SHEET:	1 / 1

UCHENG® ELECTRONICS 深圳市裕诚电子有限公司 SHENZHEN YUCHENG ELECTRONICS CO.,LTD

TITLE:	DETECTION SWITCH
PART NO:	M5-1636D
WEBSITE :	www.ycelectron.com

REV: A | UNIT: mm | SCALE: / | SHEET: A4