REV.	DESCRIPTION	DESIGN	DATE
A/0	NEW	CWF	

RoHS Compliant

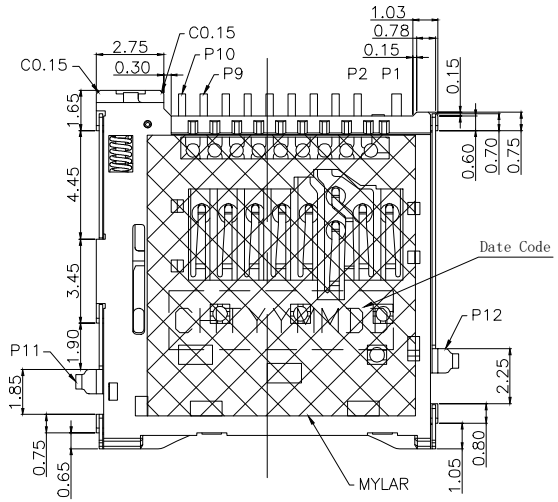

BOTTOM VIEM (CONNECTOR)
TOP VIEM (SYSTEM)

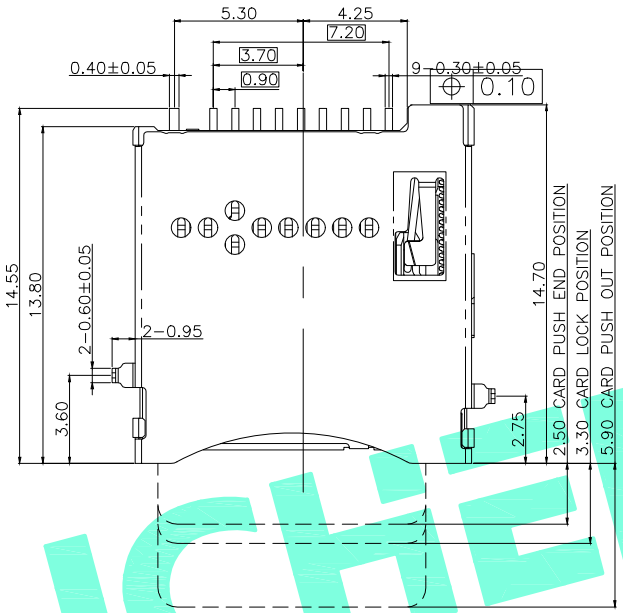

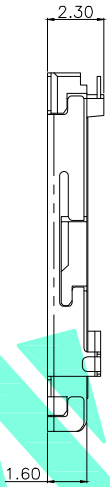

Pin No.	Pin Assignment
P1	MICRO SD CD
P2	MICRO SD DAT1
P3	MICRO SD DAT0
P4	MICRO SD VSS
P5	MICRO SD CLK
P6	MICRO SD VDD
P7	MICRO SD CMD
P8	MICRO SD CD/DAT3
P9	MICRO SD DAT2
P10	MICRO SD GND
P11	MICRO SD GND
P12	MICRO SD GND

Specification

1 Current Rating :0.5A.
2 Voltage Rating :DC 5V
3 Ambient Temperature Range :-25°C~+85°C
4 Ambient Humidity Range :95% R.H. Max.
5 Contact Resistance:100mΩ max.
6 Insulation Resistance:1000MΩ min./500VDC
7 Durability:5,000 cycles

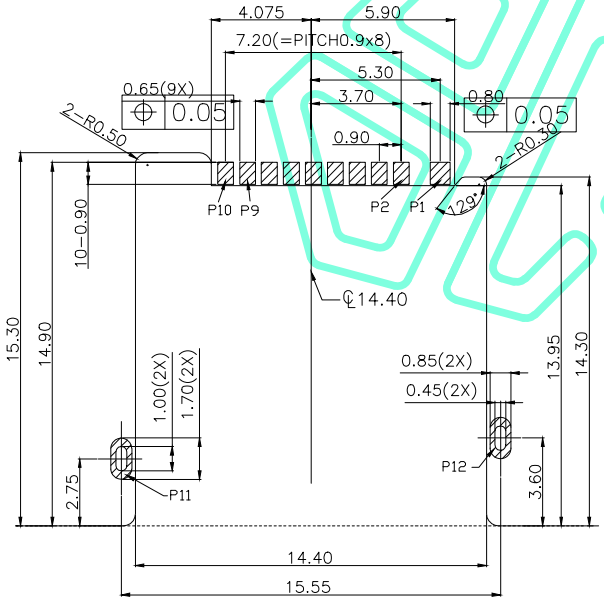

PAD AREA

Recommended P.C.B LAYOUT
BOTTOM VIEW(CONNECTOR) (TOLERANCE+/-0.05)
TOP VIEW(SYSTEM)

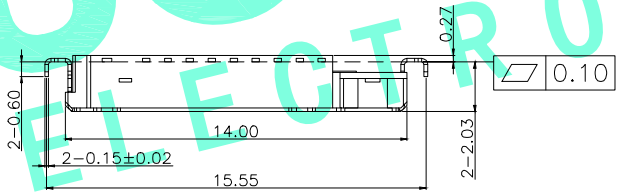

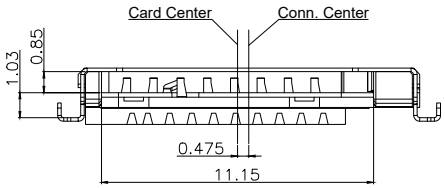

Close of Switch	Card Detect Switch
Card Uninsertion	Open
Card Half Insertion	Open
Card Insertion	Close
N/O	Open Close

ITEM	PART NAME	QTY.	MATERIAL	FINISHING
③	Shell	1	SUS	Au/Ni Plated
②	Contact	9	COPPER ALLOY	Au/Ni Plated
①	Housing	1	LCP	Black

THESE DRAWINGS AND SPECIFICATIONS ARE THE PROPERTY OF SHENZHEN YUCHENG ELECTRONICS.,LTD.AND SHALL NOT BE REPROOUCED.COPIED OR USED IN ANY MANNER WITHOUT THE PRIOR WRITTEN CONSENT OF SHENZHEN YUCHENG ELECTRONICS.,LTD

APPROVED:	WEI JIE
CHECKED:	HONG JIN YUN
DRAWING:	CHEN YA

GENERAL TOLERANCES	
30~以上	±0.30
10~30	±0.25
5~10	±0.20
~ 5	±0.15
SHEET:	1 / 1

深圳市裕诚电子有限公司
SHENZHEN YUCHENG ELECTRONICS CO.,LTD

TITLE:	MicroSD卡座 push type沉板式H2.30mm
PART NO:	SD-149Y
WEBSITE :	www.ycelectron.com
REV: A	UNIT: mm / SCALE: / / SHEET: A4