REV.	DESCRIPTION	DESIGN	DATE
A/0	NEW	CWF	

RoHS Compliant

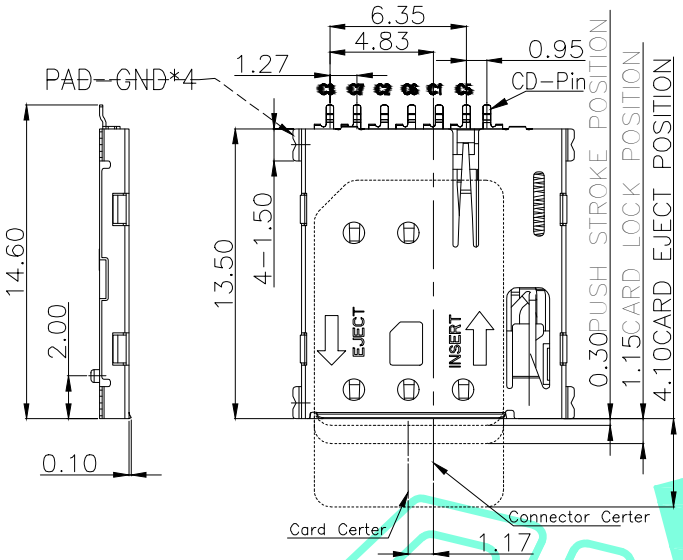

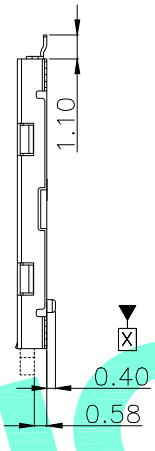

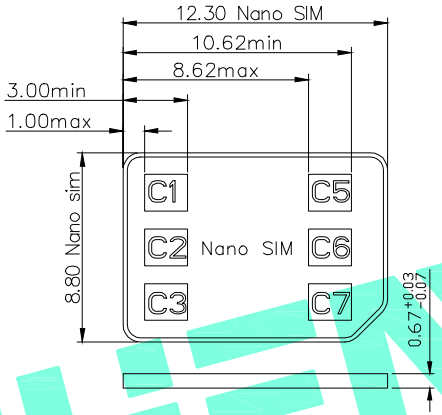

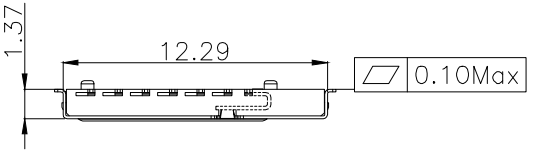

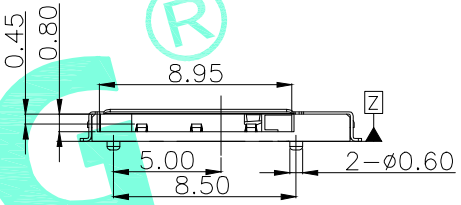

Specification:
1.Current rating: 0.5 A
2.Voltage rating: DC 5V
3.Dielectric strength:500V AC RMS for 1 minute.
4.Contact resistance:100mΩ max.
5.Insulator resistance:500MΩ min.at 250V DC.
6.Mating unmating cycles:3000 cycles

SIM CARD	
Pin No.	NAME
C1	VCC
C2	RST
C3	CLK
C5	GND
C6	VPP
C7	I/O

CRICUIT DIAGRAM FOR CARD DETECT SWITCH

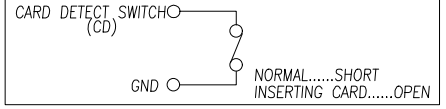

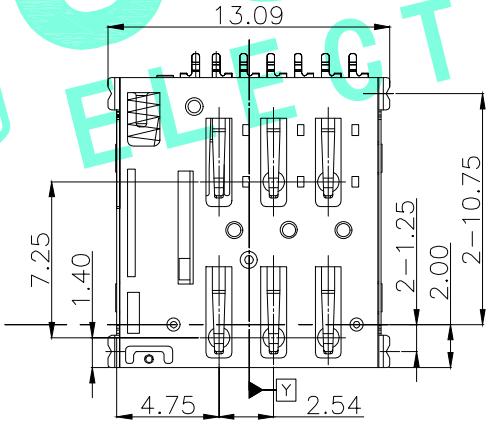

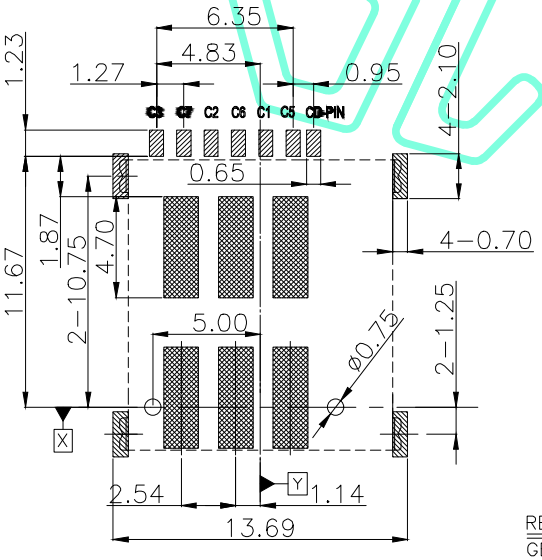

PAD AREA
KEEP OUT AREA
GND PATTERN ONLY
NO COPPER AREA
(NO Trace&Via&GND)
RECOMMENDED PCB LAYOUT
GENERAL TOLERANCE ±0.05

ITEM	PART NAME	QTY.	MATERIAL	FINISHING
③	Shell	1	SUS	Ni Plated
②	Terminal	6	Phosphor Bronze	Au Plated
①	Housing	1	LCP	Black

THESE DRAWINGS AND SPECIFICATIONS ARE THE PROPERTY OF SHENZHEN YUCHENG ELECTRONICS.,LTD.AND SHALL NOT BE REPROOUCED.COPIED OR USED IN ANY MANNER WITHOUT THE PRIOR WRITTEN CONSENT OF SHENZHEN YUCHENG ELECTRONICS.,LTD

APPROVED:	WEI JIE
CHECKED:	HONG JIN YUN
DRAWING:	CHEN YA

GENERAL TOLERANCES	
30~以上	±0.30
10~30	±0.25
5~10	±0.20
~ 5	±0.15
SHEET:	1 / 1

UCHENG ELECTRONICS 深圳市裕诚电子有限公司
SHENZHEN YUCHENG ELECTRONICS CO.,LTD

TITLE:	Nano SIM卡座 小卡 自弹式7P
PART NO:	SIM-146Y
WEBSITE :	www.ycelectron.com
REV: A	UNIT: mm / SCALE: / / SHEET: A4